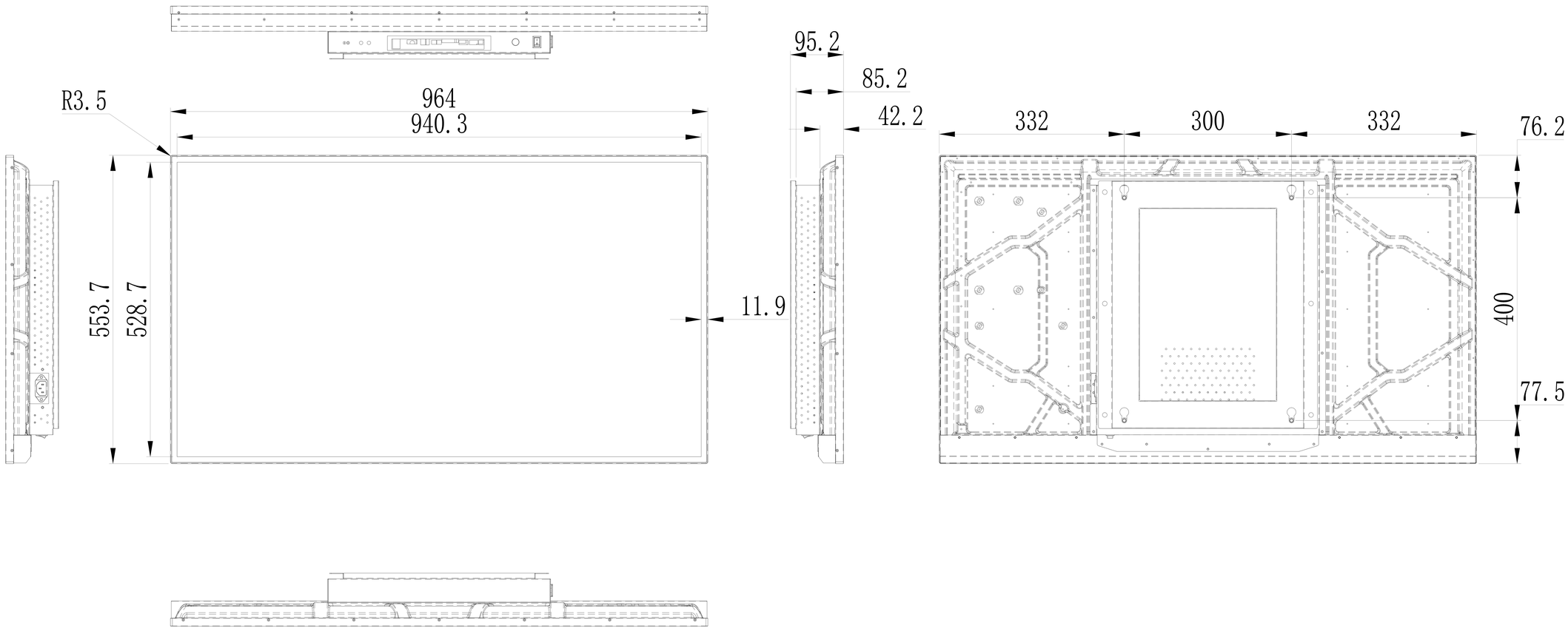
R3.5
964
940.3
553.7
528.7
11.9
95.2
85.2
42.2
332
300
332
76.2
400
77.5