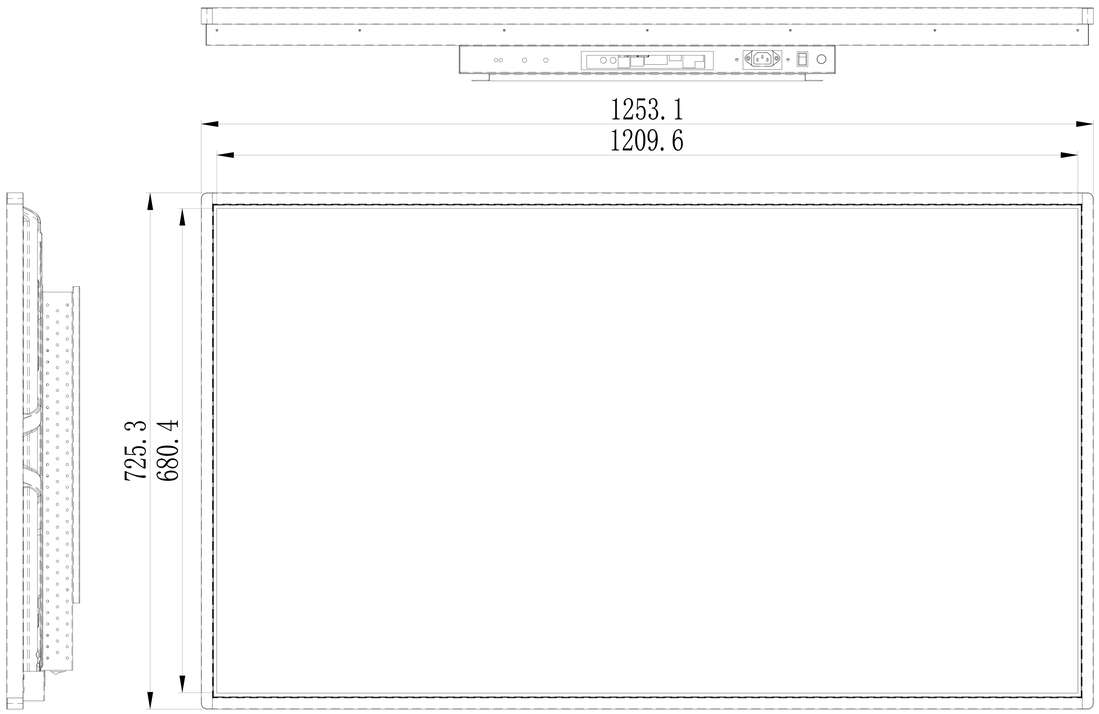
1253.1
1209.6
725.3
680.4

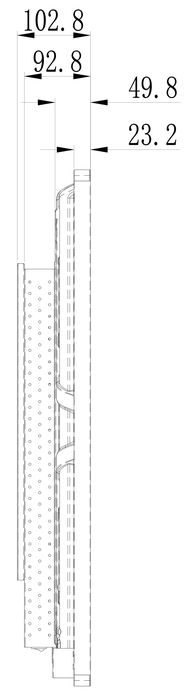
102.8
92.8
49.8
23.2

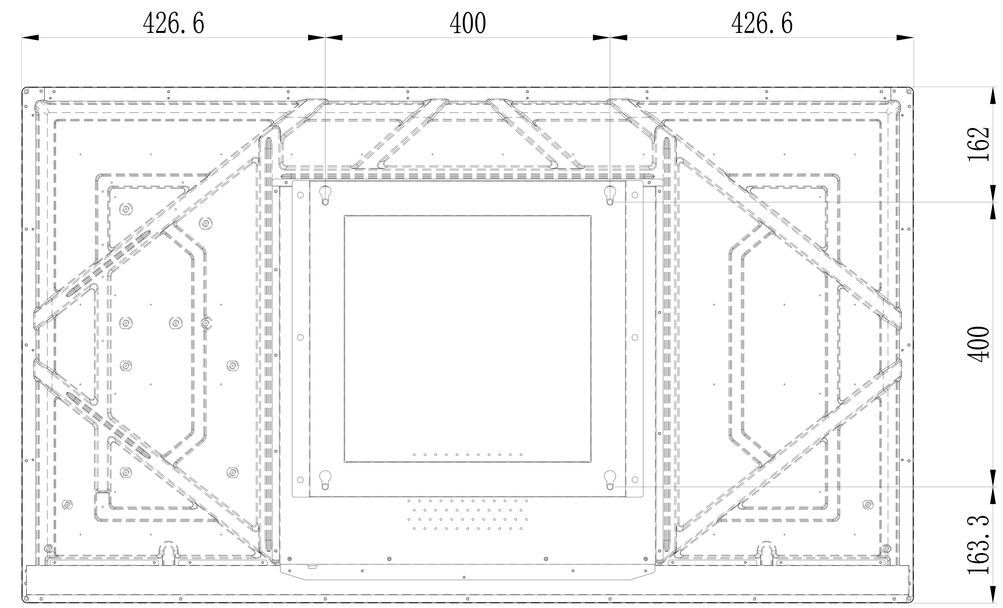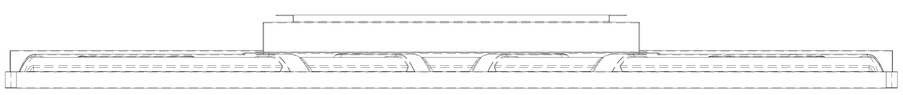
426.6
400
426.6
162
400
163.3