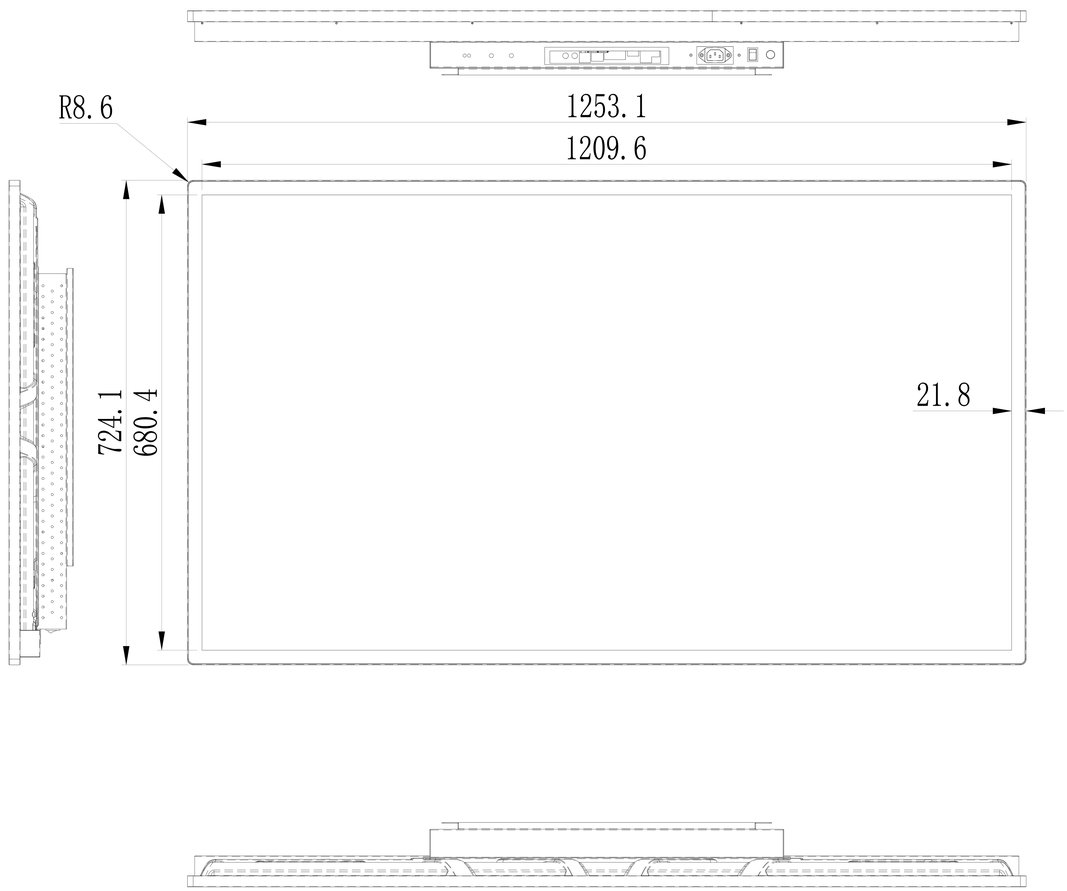
R8.6
1253.1
1209.6
724.1
680.4
21.8

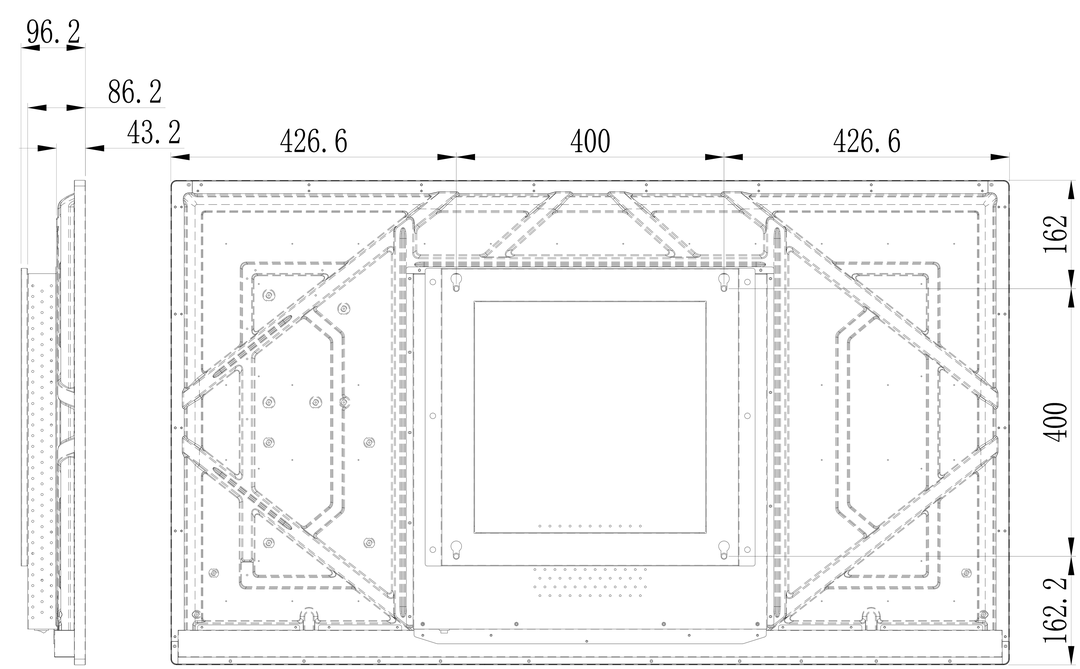
96.2
86.2
43.2
426.6
400
426.6
162
400
162.2