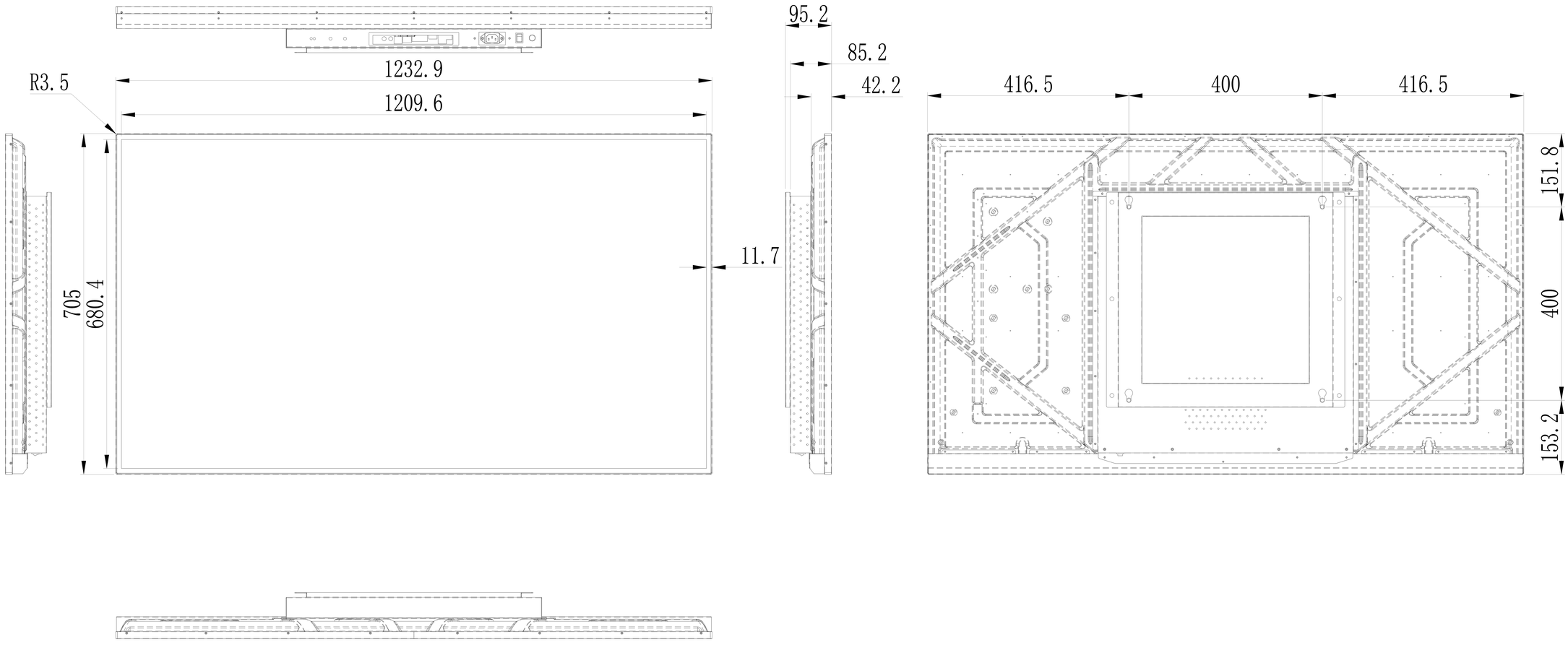
R3.5
1232.9
1209.6
705
680.4
11.7
95.2
85.2
42.2
416.5
400
416.5
151.8
400
153.2